Cambridge Assessment International Education

Cambridge International AS & A Level

CANDIDATE NAME	

CENTRE NUMBER						CANDIDATE NUMBER				

9995632514

PHYSICS **9702/31**

Paper 3 Advanced Practical Skills 1 **May/June 2024**

2 hours

You must answer on the question paper.

You will need: The materials and apparatus listed in the confidential instructions

INSTRUCTIONS

- Answer **all** questions.
- Use a black or dark blue pen. You may use an HB pencil for any diagrams or graphs.
- Write your name, centre number and candidate number in the boxes at the top of the page.
- Write your answer to each question in the space provided.
- Do **not** use an erasable pen or correction fluid.
- Do **not** write on any bar codes.
- You will be allowed to work with the apparatus for a maximum of 1 hour for each question.
- You should record all your observations in the spaces provided in the question paper as soon as these observations are made.
- You may use a calculator.
- You should show all your working and use appropriate units.

INFORMATION

- The total mark for this paper is 40.
- The number of marks for each question or part question is shown in brackets [ ].

For Examiner's Use	
1	
2	
Total	

This document has **12** pages.

© UCLES 2024

You may not need to use all of the materials provided.

1 In this experiment, you will investigate an electrical circuit.

You have been provided with a metre rule with a wire attached. You have also been provided with six identical resistors. Four of the resistors are connected in series and attached to a wooden block. The other resistors are labelled X and Z.

(a) ● Set up the circuit shown in Fig. 1.1.

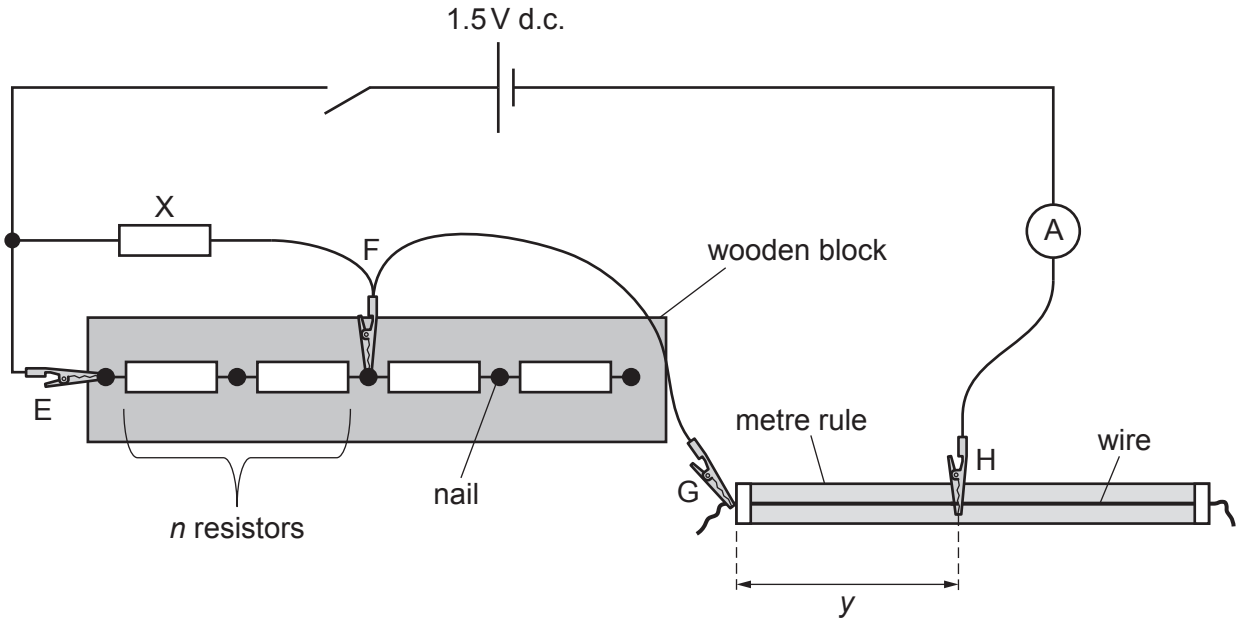

Fig. 1.1 (not to scale)

- E, F, G and H are crocodile clips.

  n resistors on the wooden block are connected in parallel with X. Connect F so that *n* = 2, as shown in Fig. 1.1.

- The distance between G and H is *y*. Attach H to the wire so that *y* is approximately 50 cm.

- Close the switch.

- Record *n*, *y* and the ammeter reading *I*.

  n = ...

  y = ...

  I = ...

- Open the switch.

[2]

(b) ● Connect Z as shown in Fig. 1.2.

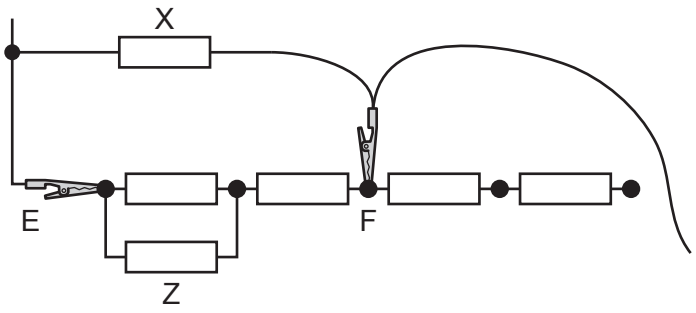

Fig. 1.2

When Z is connected in parallel with the first of the resistors on the block, the total value of *n* is reduced by 0.5.

For the arrangement in Fig. 1.2, the value of *n* is 1.5.

- Close the switch.
- Change the position of H on the wire until the value of I is as close as possible to your value in **(a)**.
- Record *n* and *y*.

n = ...

y = ...

- Open the switch.
- Disconnect Z.

[1]

(c) Vary n by changing the position of F and connecting and disconnecting Z.

For each value of n, change the position of H until the value of I is as close as possible to your value in **(a)**.

Repeat until you have six sets of values of n and y. Include your values from **(a)** and **(b)**.

Record your results in a table. Include values of $\frac{n}{n+1}$ to two significant figures in your table.

[8]

(d) (i) Plot a graph of y on the y-axis against $\frac{n}{n+1}$ on the x-axis. [3]

(ii) Draw the straight line of best fit. [1]

(iii) Determine the gradient and y-intercept of this line.

gradient = ...

y-intercept = ...

[2]

© UCLES 2024

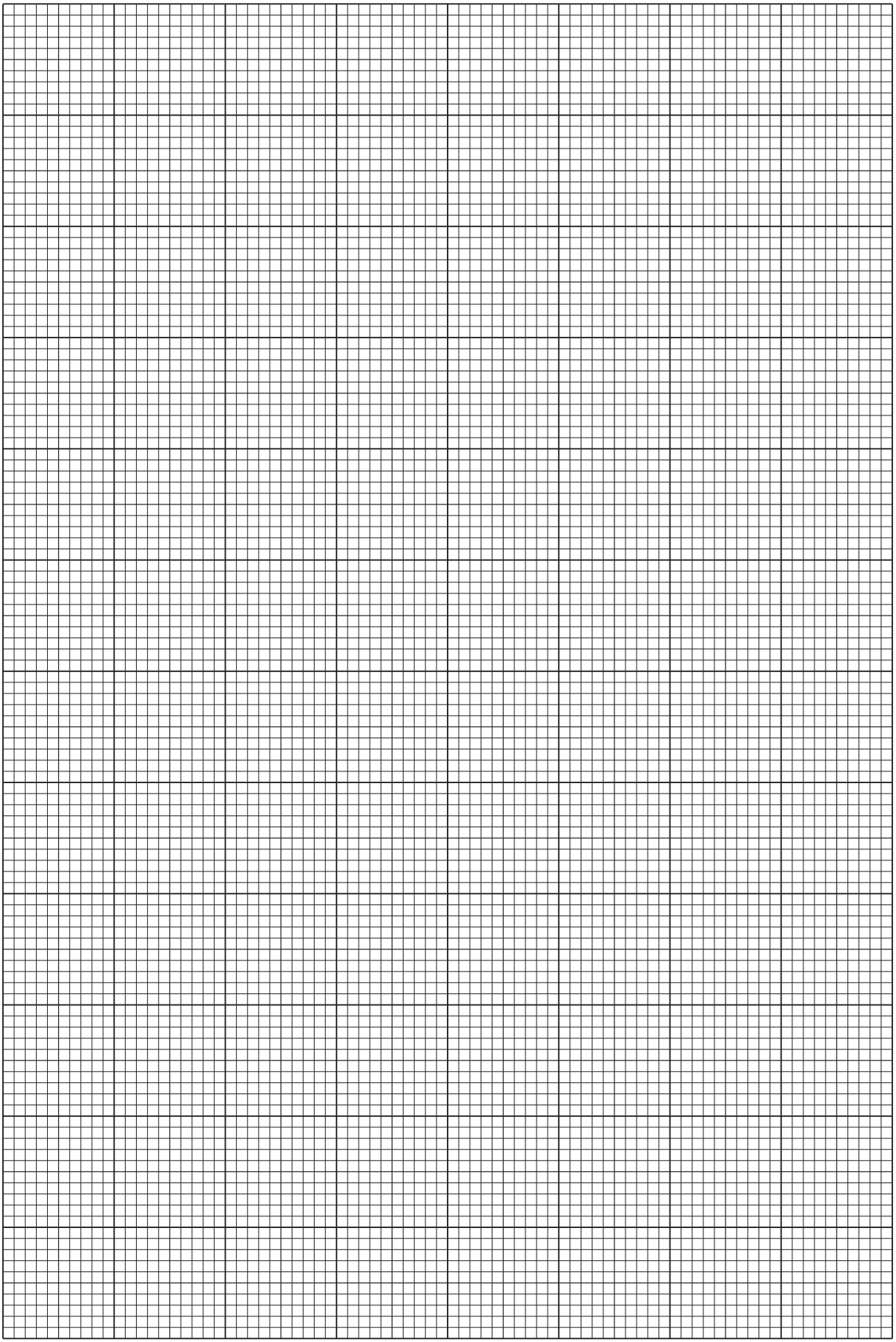

(e) It is suggested that the quantities y and n are related by the equation

$$y = -\frac{Pn}{n+1} + Q$$

where P and Q are constants.

Using your answers in **(d)(iii)**, determine the values of P and Q.
Give appropriate units.

P = ...

Q = ...
[2]

(f) Theory suggests that

$$\frac{P}{Q} = \frac{X}{C}$$

where the resistance X of resistor X is 12 Ω and C is the resistance of the whole circuit.

Use your values in **(e)** to determine a value for C.

C = ... Ω [1]

[Total: 20]

You may not need to use all of the materials provided.

2 In this experiment, you will investigate the oscillations of a rod.

(a) (i) The length of the rod is L, as shown in Fig. 2.1.



Fig. 2.1

Measure and record L.

L = ... [1]

(ii) The mass of the rod is M.

Measure and record M.

M = ... [1]

(iii) Calculate S, where

$$S = \frac{ML^2}{12}.$$

S = ... [1]

(iv) Justify the number of significant figures that you have given for your value of S.

.....

.....

..... [1]

(b) (i) ● Wrap one end of the copper wire tightly three times around the centre of the rod, as shown in Fig. 2.2.

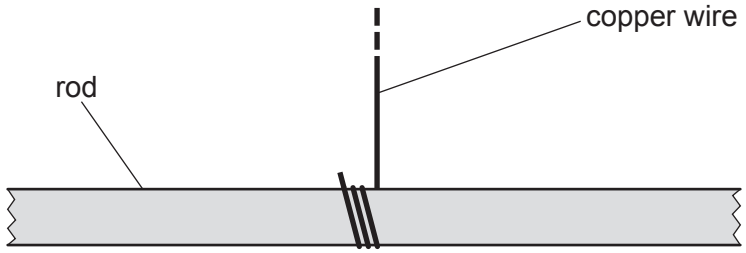

Fig. 2.2

● Slide a 50 g slotted mass onto each end of the rod.

● Record the mass *m* on **one** end of the rod.

m = ... g

● Adjust the positions of the masses so that they are equally spaced from the centre of the rod and their centres are approximately 3 cm apart, as shown in Fig. 2.3. You may need to use some of the adhesive putty to keep the masses in position.

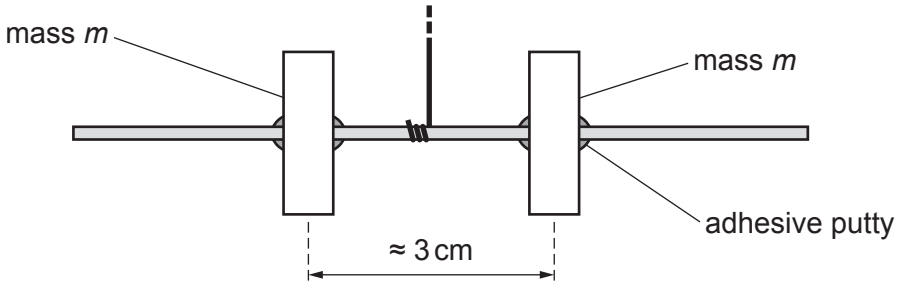

Fig. 2.3

© UCLES 2024

- Set up the apparatus as shown in Fig. 2.4.

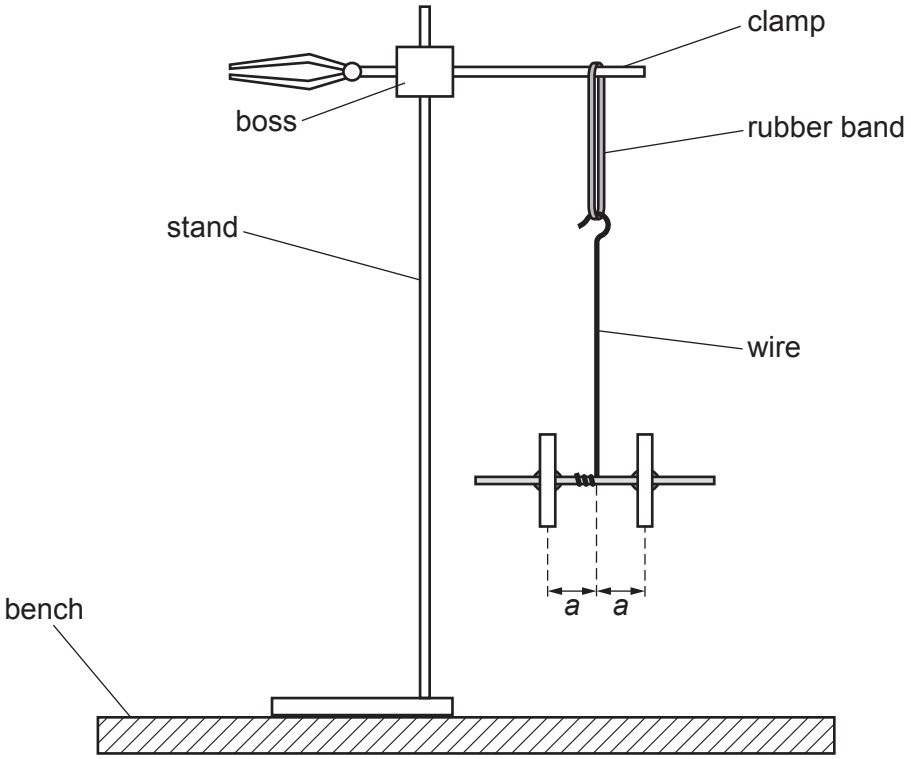

Fig. 2.4

- Make a hook in the wire and place the hook on the rubber band.
- The distance between the centre of each mass and the wire is *a*.

  Adjust the position of the masses until the rod is parallel to the bench and each mass is the same distance *a* from the wire.
- Measure and record *a*.

a = ...
[1]

(ii) Estimate the percentage uncertainty in your value of *a*. Show your working.

percentage uncertainty = ... % [1]

(c)
- Rotate the rod horizontally through 90°.
- Release the rod. The rod will oscillate.
- Take measurements to determine the period T of these oscillations.

T = ... [2]

(d)
- Remove the hook from the rubber band.
- Remove the 50 g masses from the rod.
- Place the 10 g masses on the rod so that their centres are approximately 9 cm apart.
- Record m.

m = ... g

- Place the hook on the rubber band.
- Adjust the position of the masses until the rod is parallel to the bench and each mass is the same distance a from the wire.
- Measure and record a.

a = ...

- Repeat **(c)**.

T = ...
[2]

© UCLES 2024

(e) It is suggested that the relationship between T, S, a and m is

$$T^2 = k(S + a^2m)$$

where k is a constant.

Using your data, calculate two values of k.

first value of k = ...

second value of k = ...
[1]

(f) It is suggested that the percentage uncertainty in the values of k is 10%.

Using this uncertainty, explain whether your results support the relationship in **(e)**.

.....

.....

.....

..... [1]

(g) (i) Describe **four** sources of uncertainty or limitations of the procedure for this experiment.

For any uncertainties in measurement that you describe, you should state the quantity being measured and a reason for the uncertainty.

1 .....

.....

2 .....

.....

3 .....

.....

4 .....

.....

[4]

(ii) Describe **four** improvements that could be made to this experiment. You may suggest the use of other apparatus or different procedures.

1 .....

.....

2 .....

.....

3 .....

.....

4 .....

.....

[4]

[Total: 20]

Permission to reproduce items where third-party owned material protected by copyright is included has been sought and cleared where possible. Every reasonable effort has been made by the publisher (UCLES) to trace copyright holders, but if any items requiring clearance have unwittingly been included, the publisher will be pleased to make amends at the earliest possible opportunity.

To avoid the issue of disclosure of answer-related information to candidates, all copyright acknowledgements are reproduced online in the Cambridge Assessment International Education Copyright Acknowledgements Booklet. This is produced for each series of examinations and is freely available to download at www.cambridgeinternational.org after the live examination series.

Cambridge Assessment International Education is part of Cambridge Assessment. Cambridge Assessment is the brand name of the University of Cambridge Local Examinations Syndicate (UCLES), which is a department of the University of Cambridge.